KRP

PERFORMANCE SHEET	RX183-006-A	Page 1/2

CUSTOMER:	PHOENIX	**CUSTOMER ORDER REF:**	PHOENIX 24157
DISTRIBUTOR:	ANDANTEX INCORPORATED	**REDEX ORDER REF:**	209273
DESIGNATION:	KRP5+M.91.3.H.35/48	**SERIAL NUMBER:**	896985
CODE:	RX132915-33	**MOTOR FLANGE CODE:**	RX128583-06

For the installation, please refer to User Manual KRP (182/008)

SPECIFIC REMARKS:

Product images are for illustrative purposes only.

REDEX ANDANTEX

ZI-BP79
F45210 FERRIERES
www.redex.fr

Tel: +33 2 38 94 42 00
Fax: +33 2 38 94 42 99
Email: info@redex.fr

KRP

PERFORMANCE SHEET	RX183-006-A	Page 2/2

EXTERNAL DIMENSIONS & INTERFACES: **SN:** 896985

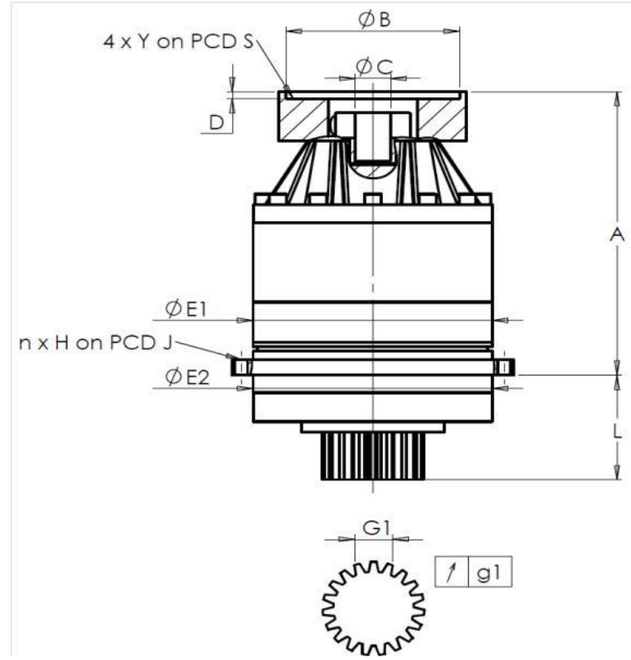

General tolerance: Js13	Cmm	Automatic / manual coordinate-measuring machine	µm	Micrometer	Cr	Calliper rule	Di	Dial indicator	Pg	Plug gauge

HOUSING						OUTPUT PINION						MOTOR FLANGE				
requirement					measure	requirement					measure	requirement				measure
					L0589						R1930					
	E1	355j6 $^{+0,018}_{-0,018}$	µm	355		Span dimension over 3 teeth						Ø	B	115	µm	115,02
	E2	355j6 $^{+0,018}_{-0,018}$	µm	354,99			G1	62,97 $^{0}_{-0,05}$	Cmm	62,94		Ø	C	35 $^{+0,05}_{+0,025}$	µm	35,035
n x H on PCD J		12 Ø17,5 on PCD 385	Cr	12 Ø17,5 on PCD 385			g1	0,03	Di	0,018			D	8	Cr	8,31
			Cr									Ø	S1	200	Cr	200
	A	421	µm	421,8		No-load input torque						Ø	Y1	M12	Pg	M12
	L	178	µm	178,23		Line 1					1 Nm					

	Line	Stiffness
Torsional stiffness (Nm/arcmin)	1	1078
Radial stiffness (N/µm)	1	1255

Noise level	
@1000 rpm input (dB(A))	64,0

Date: 15/04/2015 **Visa:** JJ PELLÉ

Version: A

REDEX ANDANTEX

ZI-BP79
F45210 FERRIERES
www.redex.fr

Tel: +33 2 38 94 42 00
Fax: +33 2 38 94 42 99
Email: info@redex.fr