KRP

PERFORMANCE SHEET	RX183-006-A	Page 1/2

CUSTOMER:	YONG JU PRECISION TECHNOL	**CUSTOMER ORDER REF:**	YONG JU RX104302T
DISTRIBUTOR:		**REDEX ORDER REF:**	209020
DESIGNATION:	KRP3+R.31.4.H	**SERIAL NUMBER:**	896978
CODE:	RX128565-12	**MOTOR FLANGE CODE:**	

For the installation, please refer to User Manual KRP (182/008)

SPECIFIC REMARKS:

Product images are for illustrative purposes only.

REDEX ANDANTEX

ZI-BP79
F45210 FERRIERES
www.redex.fr

Tel: +33 2 38 94 42 00
Fax: +33 2 38 94 42 99
Email: info@redex.fr

KRP

PERFORMANCE SHEET	RX183-006-A	Page 2/2

EXTERNAL DIMENSIONS & INTERFACES: **SN:** 896978

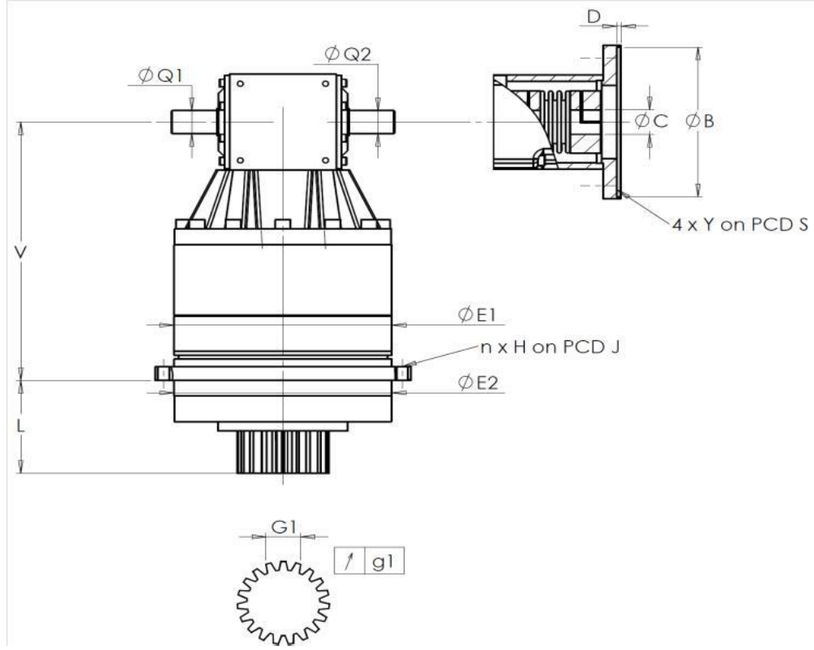

General tolerance: Js13	Cmm	Automatic / manual coordinate-measuring machine	µm	Micrometer	Cr	Calliper rule	Di	Dial indicator	Pg	Plug gauge

HOUSING						OUTPUT PINION						MOTOR FLANGE				
requirement					measure	requirement					measure	requirement				measure
					K0741						R2052					-
		E1	255h7 $^{0}_{-0,052}$	µm	254.98	Span dimension over 3 teeth						Ø	B		µm	
		E2	255h7 $^{0}_{-0,052}$	µm	254.99		G1	39,25 $^{0}_{-0,03}$		Cmm	39,24	Ø	C		µm	
	n x H on PCD J		16 Ø13,5 on PCD 280	Cr			g1	0,022		Di	0,01		D		Cr	
				Cr	OK							Ø	S1		Cr	
		V	337	µm	337.37	No-load input torque						Ø	Y1		Pg	
		L	121	µm	121.014	Line 1					1 Nm					
	Ø	Q1	30 $^{+0,009}_{-0,004}$	µm	30.005							Noise level				
	Ø	Q2	30 $^{+0,009}_{-0,004}$	µm	30.005					Line	Stiffness	@1600 rpm input (dB(A))				73,0
						Torsional stiffness (Nm/arcmin)				1	494					
						Radial stiffness (N/µm)				1	1139					

Date: 12/03/2015 **Visa:** JJ PELLÉ

Version: A

REDEX ANDANTEX

ZI-BP79
F45210 FERRIERES
www.redex.fr

Tel: +33 2 38 94 42 00
Fax: +33 2 38 94 42 99
Email: info@redex.fr