KRP

PERFORMANCE SHEET	RX183-006-A	Page 1/2

CUSTOMER:	YONG JU PRECISION TECHNOL	**CUSTOMER ORDER REF:**	YONG JU RX104302T
DISTRIBUTOR:		**REDEX ORDER REF:**	209020
DESIGNATION:	KRP3+R.31.4.H	**SERIAL NUMBER:**	896976
CODE:	RX128565-12	**MOTOR FLANGE CODE:**	

For the installation, please refer to User Manual KRP (182/008)

SPECIFIC REMARKS:

Product images are for illustrative purposes only.

REDEX ANDANTEX
ZI-BP79
F45210 FERRIERES
www.redex.fr
Tel: +33 2 38 94 42 00
Fax: +33 2 38 94 42 99
Email: info@redex.fr

KRP

PERFORMANCE SHEET	RX183-006-A	Page 2/2

EXTERNAL DIMENSIONS & INTERFACES: **SN:** 896976

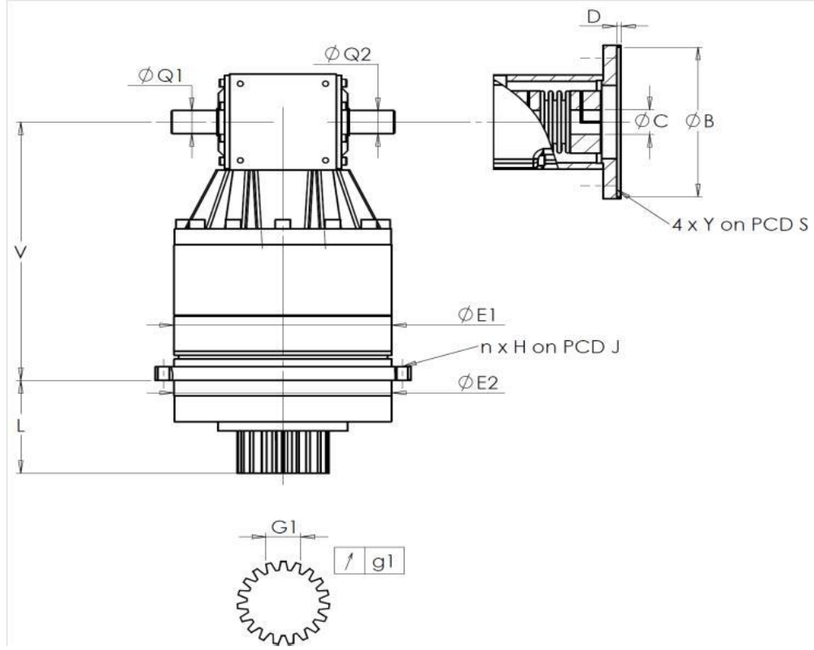

General tolerance: Js13	Cmm	Automatic / manual coordinate-measuring machine	µm	Micrometer	Cr	Calliper rule	Di	Dial indicator	Pg	Plug gauge

HOUSING						OUTPUT PINION						MOTOR FLANGE				
requirement					measure	requirement					measure	requirement				measure
					K0738						R2396					-
	E1	255h7 $^{0}_{-0,052}$		µm	254.99	Span dimension over 3 teeth						Ø	B		µm	
	E2	255h7 $^{0}_{-0,052}$		µm	254.99		G1	39,25 $^{0}_{-0,03}$		Cmm	39,24	Ø	C		µm	
n x H on PCD J		16 Ø13,5 on PCD 280		Cr		↗	g1	0,022		Di	0,01		D		Cr	
				Cr	OK							Ø	S1		Cr	
	V	337		µm	337.26	No-load input torque						Ø	Y1		Pg	
	L	121		µm	120.94	Line 1					1 Nm					
Ø	Q1	30 $^{+0,009}_{-0,004}$		µm	30.005							Noise level				
Ø	Q2	30 $^{+0,009}_{-0,004}$		µm	30.005				Line		Stiffness	@1600 rpm input (dB(A))				72,5
						Torsional stiffness (Nm/arcmin)			1		467					
						Radial stiffness (N/µm)			1		1161					

Date: 12/03/2015 **Visa:** JJ PELLÉ

Version: A

REDEX ANDANTEX
ZI-BP79
F45210 FERRIERES
www.redex.fr
Tel: +33 2 38 94 42 00
Fax: +33 2 38 94 42 99
Email: info@redex.fr