KRP

PERFORMANCE SHEET	RX183-006-A	Page 1/2

CUSTOMER:	ELECTROIMPACT	**CUSTOMER ORDER REF:**	24304 ELECTROIMPACT
DISTRIBUTOR:	ANDANTEX INCORPORATED	**REDEX ORDER REF:**	209347
DESIGNATION:	KRP2+M.46.3.H.28/38	**SERIAL NUMBER:**	896959
CODE:	RX128907-13	**MOTOR FLANGE CODE:**	RX129461-01

For the installation, please refer to User Manual KRP (182/008)

SPECIFIC REMARKS:

Product images are for illustrative purposes only.

REDEX ANDANTEX
ZI-BP79
F45210 FERRIERES
www.redex.fr
Tel: +33 2 38 94 42 00
Fax: +33 2 38 94 42 99
Email: info@redex.fr

KRP

PERFORMANCE SHEET	RX183-006-A	Page 2/2

EXTERNAL DIMENSIONS & INTERFACES: **SN:** 896959

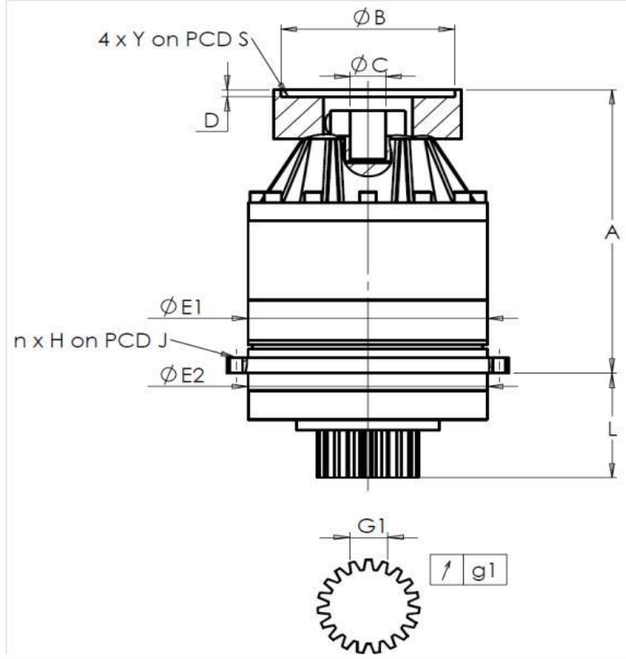

General tolerance: Js13	Cmm	Automatic / manual coordinate-measuring machine	µm	Micrometer	Cr	Calliper rule	Di	Dial indicator	Pg	Plug gauge

HOUSING

requirement				measure
				K2915
	E1	212h7 $^{0}_{-0,046}$	µm	211,98
	E2	200h7 $^{0}_{-0,046}$	µm	199,97
n x H on PCD J		12 Ø9 on PCD 233	Cr	
			Cr	OK
	A	273	µm	274,1
	L	94	µm	93,88

OUTPUT PINION

requirement				measure
				Q1619
Span dimension over 4 teeth				
	G1	44,27 $^{0}_{-0,03}$	Cmm	44,26
↗	g1	0,022	Di	0,01
No-load input torque				
Line 1				0,8 Nm

	Line	Stiffness
Torsional stiffness (Nm/arcmin)	1	254
Radial stiffness (N/µm)	1	522

MOTOR FLANGE

requirement				measure
Ø	B	131	µm	131,02
Ø	C	32 $^{+0,05}_{+0,025}$	µm	32,025
	D	5	Cr	5,6
Ø	S1	165	Cr	165
Ø	Y1	M10	Pg	OK

Noise level

@2100 rpm input (dB(A))	68,0

Date: 26/03/2015 **Visa:** JJ PELLÉ

Version: A

REDEX ANDANTEX
ZI-BP79
F45210 FERRIERES
www.redex.fr
Tel: +33 2 38 94 42 00
Fax: +33 2 38 94 42 99
Email: info@redex.fr