KRP

PERFORMANCE SHEET	RX183-006-A	Page 1/2

CUSTOMER:	ELECTROIMPACT	**CUSTOMER ORDER REF:**	24304 ELECTROIMPACT
DISTRIBUTOR:	ANDANTEX INCORPORATED	**REDEX ORDER REF:**	209347
DESIGNATION:	KRP2+M.46.3.H.28/38	**SERIAL NUMBER:**	896956
CODE:	RX128907-13	**MOTOR FLANGE CODE:**	RX129461-01

For the installation, please refer to User Manual KRP (182/008)

SPECIFIC REMARKS:

Product images are for illustrative purposes only.

REDEX ANDANTEX

ZI-BP79
F45210 FERRIERES
www.redex.fr

Tel: +33 2 38 94 42 00
Fax: +33 2 38 94 42 99
Email: info@redex.fr

KRP

PERFORMANCE SHEET	RX183-006-A	Page 2/2

EXTERNAL DIMENSIONS & INTERFACES: **SN:** 896956

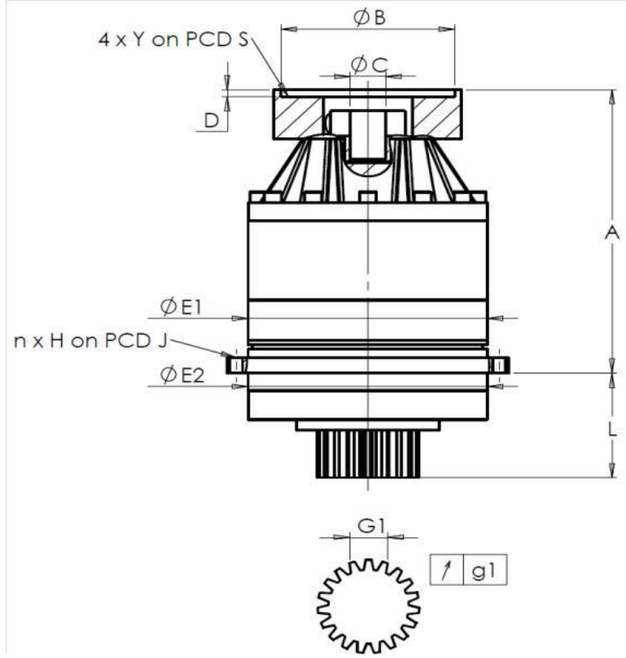

General tolerance: Js13	Cmm	Automatic / manual coordinate-measuring machine	µm	Micrometer	Cr	Calliper rule	Di	Dial indicator	Pg	Plug gauge

HOUSING

requirement				measure
				K2928
	E1	212h7 $^{0}_{-0,046}$	µm	211,99
	E2	200h7 $^{0}_{-0,046}$	µm	199,99
n x H on PCD J		12 Ø9 on PCD 233	Cr	12 Ø9 on PCD 233
			Cr	
	A	273	µm	274,16
	L	94	µm	93,97

OUTPUT PINION

requirement				measure
				Q1626
Span dimension over 4 teeth				
	G1	44,27 $^{0}_{-0,03}$	Cmm	44,258
↗	g1	0,022	Di	0,01
No-load input torque				
Line 1				0,6 Nm

	Line	Stiffness
Torsional stiffness (Nm/arcmin)	1	238
Radial stiffness (N/µm)	1	534

MOTOR FLANGE

requirement				measure
Ø	B	131	µm	131
Ø	C	32 $^{+0,05}_{+0,025}$	µm	32,045
	D	5	Cr	5,51
Ø	S1	165	Cr	165
Ø	Y1	M10	Pg	M10

Noise level

@2100 rpm input (dB(A))	66,5

Date: 26/03/2015 **Visa:** JJ PELLÉ

Version: A

REDEX ANDANTEX

ZI-BP79
F45210 FERRIERES
www.redex.fr

Tel: +33 2 38 94 42 00
Fax: +33 2 38 94 42 99
Email: info@redex.fr