CUSTOMER:	RETTIFICHE BILLA	**CUSTOMER ORDER REF:**	RETTIFICHE BILLA
DISTRIBUTOR:	ANDANTEX S.r.l	**REDEX ORDER REF:**	209339
DESIGNATION:	DRP4+R.31.4.H	**SERIAL NUMBER:**	896955
CODE:	RX129047-12	**MOTOR FLANGE CODE:**	RX129551-01

Mechanical preload data

The preload torque of the gearbox in DUALDRIVE configuration depends on the application data and features of the gearbox.

The preload torque can be increased but must never exceed the maximum value indicated below.

A too important preload torque reduces the efficiency and the life expectancy of the gearbox and the rack.

Optimal preload torque Tp:	**Following application**
Maximum preload torque:	**60,6 Nm**

For the installation, please refer to User Manual DRP (182/009)

SPECIFIC REMARKS:

Product images are for illustrative purposes only.

REDEX ANDANTEX
ZI-BP79
F45210 FERRIERES
www.redex.fr
Tel: +33 2 38 94 42 00
Fax: +33 2 38 94 42 99
Email: info@redex.fr

EXTERNAL DIMENSIONS & INTERFACES: **SN:** 896955

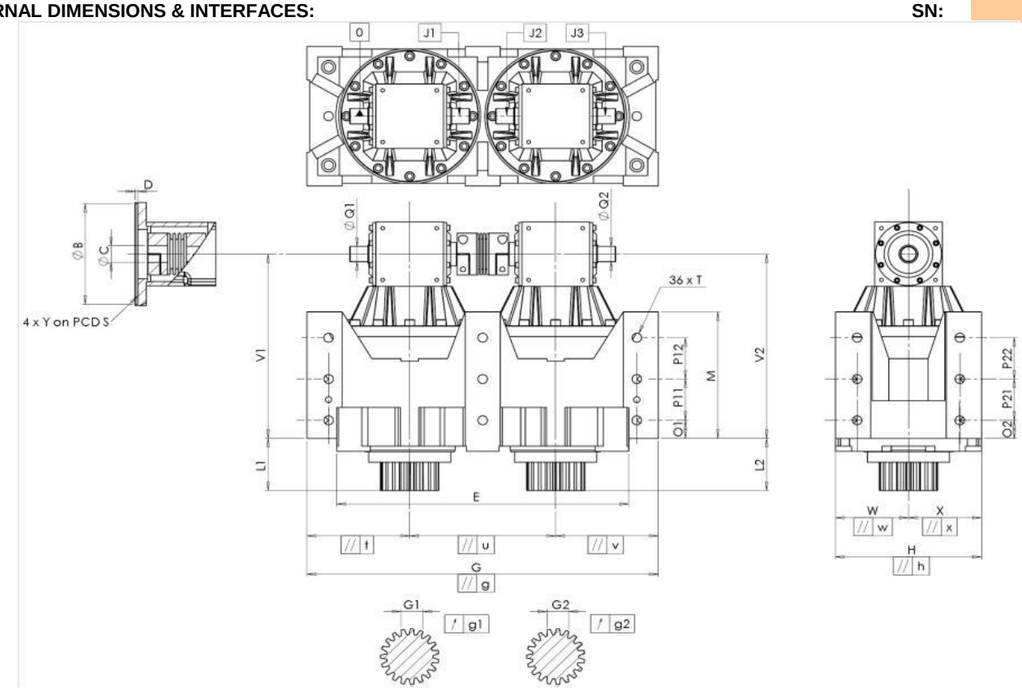

General tolerance: Js13 | *Cmm* Automatic / manual coordinate-measuring machine | *µm* Micrometer | *Cr* Calliper rule | *Di* Dial indicator | *Pg* Plug gauge

HOUSING requirement					HOUSING measure	HOUSING requirement				HOUSING measure	MOTOR FLANGE requirement				MOTOR FLANGE measure
					J9599		O1	43	*Cr*	43					K3075
	E	640	$^{0}_{-0,1}$	*Cmm*	639,979		P11	100	*Cr*	100	Ø	B	180 $^{+0,054}_{+0,014}$	*µm*	180,04
	G	800	$^{+0,2}_{-0,2}$	*Cmm*	800,12		P12	100	*Cr*	100	Ø	C	38 $^{+0,05}_{+0,025}$	*µm*	38,05
//	g	0,05		*Cmm*	0,03		M	288 $^{+0,1}_{-0,1}$	*Cmm*	288,059		D	8	*Cr*	8,11
//	t	0,05		*Cmm*	0,006		O2	43	*Cr*	43	Ø	S	215	*Cr*	215
//	u	0,035		*Cmm*	0,009		P21	100	*Cr*	100	Ø	Y	M12	*Pg*	M12
//	v	0,05		*Cmm*	0,002		P22	100	*Cr*	100					
	W	160		*Cmm*	160,015	Ø	T	M24	*Pg*	M24					
//	w	0,04		*Cmm*	0,001										
	X	160		*Cmm*	160,017										
//	x	0,04		*Cmm*	0,001										
	H	320	$^{+0,04}_{-0,04}$	*Cmm*	320,032										
//	h	0,02		*Cmm*	0,013										
	V1	435		*Cmm*	435,166										
	L1	120		*Cmm*	120,046										
	V2	435		*Cmm*	435,172										
	L2	120		*Cmm*	120,085										
Ø	Q1	35	$^{+0,011}_{-0,005}$	*Cmm*	35,006										
Ø	Q2	35	$^{+0,011}_{-0,005}$	*Cmm*	35,001										
	J1		/0	*µm*	-0,02										
	J2		/0	*µm*	-0,02										
	J3		/0	*µm*	0,02										

OUTPUT PINION				
Pinion 1				R1808
Span dimension over 3 teeth				
	G1	46,9 $^{0}_{-0,03}$	*Cmm*	46,88
↗	g1	0,022	*Di*	0,015
Pinion 2				R1800
Span dimension over 3 teeth				
	G2	46,9 $^{0}_{-0,03}$	*Cmm*	46,88
↗	g2	0,022	*Di*	0,01

No-load input torque	
Line	3,2 Nm
Line 2	3,2 Nm

	Line	Stiffness
Torsional stiffness (Nm/arcmin)	1	734
	2	727
Radial stiffness (N/µm)	1	1302
	2	1303

Noise level	
@1300 rpm input (dB(A))	

Date: 27/03/2015 **Visa:** JJ PELLÉ

Version: A

REDEX ANDANTEX
ZI-BP79
F45210 FERRIERES
www.redex.fr
Tel: +33 2 38 94 42 00
Fax: +33 2 38 94 42 99
Email: info@redex.fr