KRPX

Performance sheet — **RX183-007-D** — Page 1/2

CUSTOMER:	KIHEUNG MACHINERY	**CUSTOMER ORDER REF:**	KIHEUNG
DISTRIBUTOR:		**REDEX ORDER REF:**	209162
DESIGNATION:	KRPX2+M.31.3.H.28/38	**SERIAL NUMBER:**	896864
CODE:	RX131478-12	**MOTOR FLANGE CODE:**	RX128581-01

For the installation, please refer to User Manual KRPX (182/010)

SPECIFIC REMARKS:

Product images are for illustrative purposes only.

REDEX ANDANTEX
ZI-BP79
F45210 FERRIERES
www.redex.fr
Tel: +33 2 38 94 42 00
Fax: +33 2 38 94 42 99
Email: info@redex.fr

KRPX

Performance sheet — **RX183-007-D** — Page 2/2

EXTERNAL DIMENSIONS & INTERFACES: **SN:** 896864

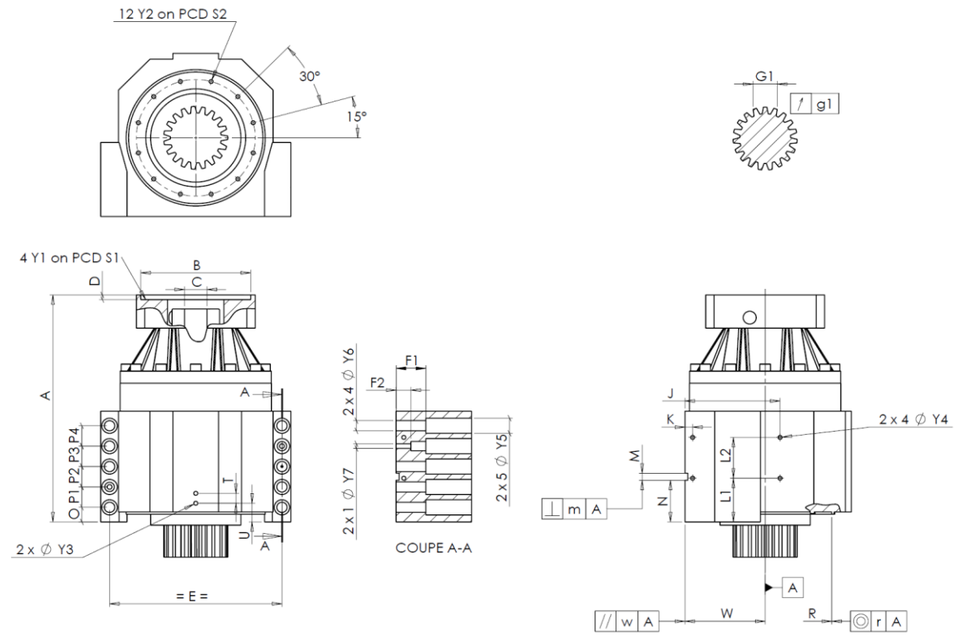

General tolerance: Js13	Cmm	Automatic / manual coordinate-measuring machine	µm	Micrometer	Cr	Calliper rule	Di	Dial indicator	Pg	Plug gauge

HOUSING						HOUSING						MOTOR FLANGE				
	requirement			measure			requirement			measure			requirement		measure	
					K5875			L1	60	Cr	60					
		Y2	M6x12	Pg	OK			L2	60	Cr	60		Ø	B	181 µm	180.95
	Ø	S2	165 +0,1 -0,1	Cr	165			J	130	Cr	130		Ø	C	38 +0,05 +0,025 µm	38.03
		A	332	µm	332.62			K	11	Cr	11			D	8 Cr	8.54
		E	240	Cr	240		2 x 4Ø	Y4	M6x12	Pg	OK		Ø	S1	215 Cr	215
		O	15	Cr	15			F1	40	Cr	40		Ø	Y1	M12 Pg	OK
		P1	30	Cr	30			F2	24	Cr	24					
		P2	30	Cr	30		2 x 1Ø	Y7	10	µm	10		**No-load input torque**			
		P3	30	Cr	30		2 x 4Ø	Y6	15,5	µm	15.5		Line 1			0,5 Nm
		P4	30	Cr	30		2 x 5Ø	Y5	24	µm	24					
		T	14	Cr	14			M H6	10 +0,009 0	Cmm	10,006				**Line**	**Stiffness**
		U	26	Cr	26		⊥	m	0,05	Cmm	0,01		Torsional stiffness (Nm/arcmin)		1	266
	2 x 1Ø	Y3	M6x12	Pg	OK			N	55 +0,1 -0,1	Cmm	55,077					
		R	186 +0,2 +0,1	Cmm	186,172	A		W	110 +0,02 -0,02	Cmm	109,984		Radial stiffness (N/µm)		1	496
	◎	r	0,1	Cmm	0,04		//	w	0,03 /A	Cmm	0,008					

OUTPUT PINION					
					Q0444
Span dimension over 4 teeth					
		G1	44,27 0 -0,03	Cmm	44,255
	↗	g1	0,022	Di	0,01

Noise level	
@2100 rpm input (dB(A))	71,0

Date: 29/01/2015 **Visa:** JJ PELLÉ

Version: A

REDEX ANDANTEX
ZI-BP79
F45210 FERRIERES
www.redex.fr
Tel: +33 2 38 94 42 00
Fax: +33 2 38 94 42 99
Email: info@redex.fr