CUSTOMER:	AWEA	**CUSTOMER ORDER REF:**	AWEA RX104307T
DISTRIBUTOR:	GUEDEL LINEARTEC	**REDEX ORDER REF:**	209232
DESIGNATION:	DRP2+R.21.4.H	**SERIAL NUMBER:**	896802
CODE:	RX128950-11	**MOTOR FLANGE CODE:**	

Mechanical preload data

The preload torque of the gearbox in DUALDRIVE configuration depends on the application data and features of the gearbox.

The preload torque can be increased but must never exceed the maximum value indicated below.

A too important preload torque reduces the efficiency and the life expectancy of the gearbox and the rack.

Optimal preload torque Tp:	**Following application**
Maximum preload torque:	**16,7 Nm**

For the installation, please refer to User Manual DRP (182/009)

SPECIFIC REMARKS:

*** Accepted according to Redex derogation RX 7340**

Product images are for illustrative purposes only.

REDEX ANDANTEX
ZI-BP79
F45210 FERRIERES
www.redex.fr
Tel: +33 2 38 94 42 00
Fax: +33 2 38 94 42 99
Email: info@redex.fr

EXTERNAL DIMENSIONS & INTERFACES: **SN:** 896802

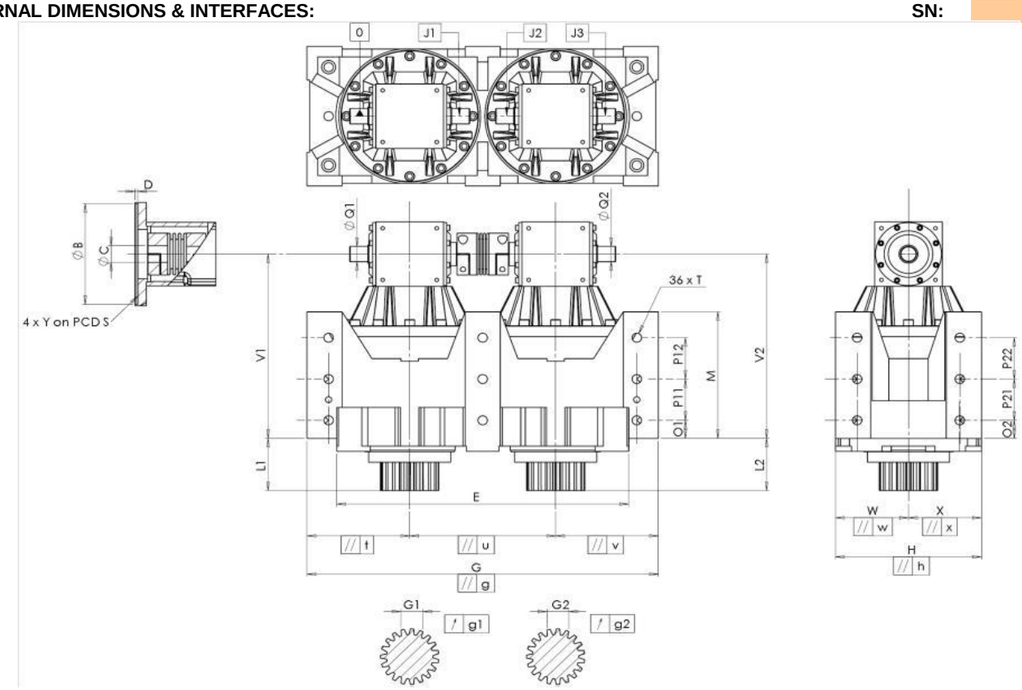

General tolerance: Js13 | Cmm: Automatic / manual coordinate-measuring machine | µm: Micrometer | Cr: Calliper rule | Di: Dial indicator | Pg: Plug gauge

HOUSING

	requirement			measure
				K1291
	E	460 $^{0}_{-0,05}$	Cmm	459,917 *
	G	560 $^{+0,1}_{-0,1}$	Cmm	560,044
//	g	0,045	Cmm	0,02
//	t	0,045	Cmm	0,001
//	u	0,03	Cmm	0,012
//	v	0,045	Cmm	0,009
	W	115	Cmm	114,985
//	w	0,03	Cmm	0,007
	X	115	Cmm	115,028
//	x	0,03	Cmm	0,006
	H	230 $^{+0,025}_{-0,025}$	Cmm	230,013
//	h	0,02	Cmm	0,009
	V1	298	Cmm	298,17
	L1	85	Cmm	84,96
	V2	298	Cmm	298,28
	L2	85	Cmm	84,92
Ø	Q1	25 $^{+0,009}_{-0,004}$	Cmm	25
Ø	Q2	25 $^{+0,009}_{-0,004}$	Cmm	25,005
	J1	/0	µm	-0,03
	J2	/0	µm	0
	J3	/0	µm	-0,01

HOUSING

	requirement			measure
	O1	30	Cr	30
	P11	75	Cr	75
	P12	75	Cr	785
	M	210 $^{+0,1}_{-0,1}$	Cmm	210,008
	O2	30	Cr	30
	P21	75	Cr	75
	P22	75	Cr	75
Ø	T	M16	Pg	M16

OUTPUT PINION

Pinion 1				Q0450
Span dimension over 4 teeth				
	G1	44,27 $^{0}_{-0,03}$	Cmm	44,25
↗	g1	0,022	Di	0,01
Pinion 2				Q0439
Span dimension over 4 teeth				
	G2	44,27 $^{0}_{-0,03}$	Cmm	44,255
↗	g2	0,022	Di	0,015

No-load input torque

Line	0,8 Nm
Line 2	0,8 Nm

MOTOR FLANGE

	requirement			measure
				-
Ø	B		µm	
Ø	C		µm	
	D		Cr	
Ø	S		Cr	
Ø	Y		Pg	

	Line	Stiffness
Torsional stiffness (Nm/arcmin)	1	234
	2	227
Radial stiffness (N/µm)	1	495
	2	426

Noise level	
@2100 rpm input (dB(A))	75,0

Date: 30/01/2015 **Visa:** JJ PELLÉ

Version: A

REDEX ANDANTEX
ZI-BP79
F45210 FERRIERES
www.redex.fr
Tel: +33 2 38 94 42 00
Fax: +33 2 38 94 42 99
Email: info@redex.fr