CUSTOMER:	SPARK	**CUSTOMER ORDER REF:**	SPARK GF141128-FN036
DISTRIBUTOR:	GUEDEL CHINA	**REDEX ORDER REF:**	209188
DESIGNATION:	DRP4+R.91.4.H	**SERIAL NUMBER:**	896786
CODE:	RX129047-33	**MOTOR FLANGE CODE:**	RX129551-01

Mechanical preload data

The preload torque of the gearbox in DUALDRIVE configuration depends on the application data and features of the gearbox.

The preload torque can be increased but must never exceed the maximum value indicated below.

A too important preload torque reduces the efficiency and the life expectancy of the gearbox and the rack.

Optimal preload torque Tp:	**Following application**
Maximum preload torque:	**18,1 Nm**

For the installation, please refer to User Manual DRP (182/009)

SPECIFIC REMARKS:

Product images are for illustrative purposes only.

REDEX ANDANTEX
ZI-BP79
F45210 FERRIERES
www.redex.fr
Tel: +33 2 38 94 42 00
Fax: +33 2 38 94 42 99
Email: info@redex.fr

EXTERNAL DIMENSIONS & INTERFACES: **SN:** 896786

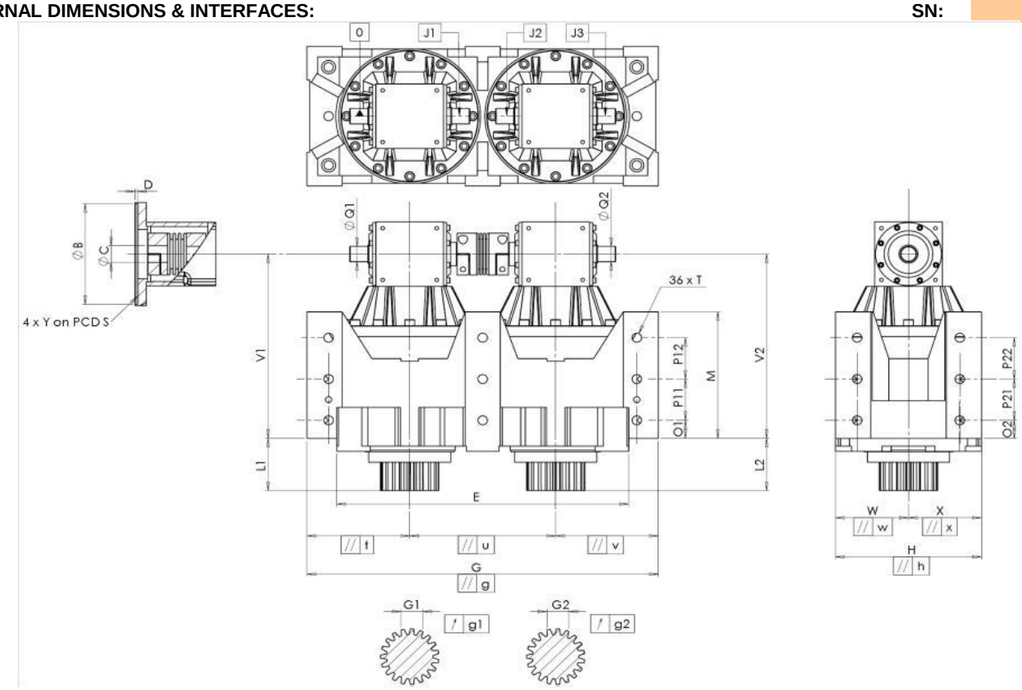

General tolerance: Js13 | *Cmm* Automatic / manual coordinate-measuring machine | *µm* Micrometer | *Cr* Calliper rule | *Di* Dial indicator | *Pg* Plug gauge

HOUSING requirement					HOUSING measure	HOUSING requirement				HOUSING measure	MOTOR FLANGE requirement				MOTOR FLANGE measure
					K8016		O1	43	*Cr*	43					K3060
	E	640	0 / -0,1	*Cmm*	639,982		P11	100	*Cr*	100	Ø	B	180	+0,054 / +0,014 *µm*	180,052
	G	800	+0,2 / -0,2	*Cmm*	800,118		P12	100	*Cr*	100	Ø	C	38	+0,05 / +0,025 *µm*	38,05
//	g	0,05		*Cmm*	0,02		M	288	+0,1 / -0,1 *Cmm*	288,1		D	8		*Cr* 8,108
//	t	0,05		*Cmm*	0,005		O2	43	*Cr*	43	Ø	S	215		*Cr* 215
//	u	0,035		*Cmm*	0,005		P21	100	*Cr*	100	Ø	Y	M12		*Pg* M12
//	v	0,05		*Cmm*	0,001		P22	100	*Cr*	100					
	W	160		*Cmm*	160,019	Ø	T	M24	*Pg*	M24					
//	w	0,04		*Cmm*	0,001										
	X	160		*Cmm*	160,007										
//	x	0,04		*Cmm*	0,001										
	H	320	+0,04 / -0,04	*Cmm*	320,026										
//	h	0,02		*Cmm*	0,01										
	V1	435		*Cmm*	435,141										
	L1	120		*Cmm*	119,985										
	V2	435		*Cmm*	435,216										
	L2	120		*Cmm*	120,018										
Ø	Q1	35	+0,011 / -0,005	*Cmm*	35,004										
Ø	Q2	35	+0,011 / -0,005	*Cmm*	35										
	J1		/0	*µm*	0										
	J2		/0	*µm*	-0,02										
	J3		/0	*µm*	0,02										

OUTPUT PINION				
Pinion 1				R1783
Span dimension over 3 teeth				
	G1	46,9	0 / -0,03 *Cmm*	46,883
↗	g1	0,022	*Di*	0,01
Pinion 2				R1789
Span dimension over 3 teeth				
	G2	46,9	0 / -0,03 *Cmm*	46,888
↗	g2	0,022	*Di*	0,01

No-load input torque	
Line	2 Nm
Line 2	2 Nm

	Line	Stiffness
Torsional stiffness (Nm/arcmin)	1	687
	2	684
Radial stiffness (N/µm)	1	1179
	2	1113

Noise level	
@1300 rpm input (dB(A))	70,5

Date: 19/01/2015 **Visa:** JJ PELLÉ

Version: A

REDEX ANDANTEX
ZI-BP79
F45210 FERRIERES
www.redex.fr
Tel: +33 2 38 94 42 00
Fax: +33 2 38 94 42 99
Email: info@redex.fr