KRP

PERFORMANCE SHEET	RX183-006-A	Page 1/2

CUSTOMER:	HANKOOK MACHINE	**CUSTOMER ORDER REF:**	HANKOOK YFM1410-08
DISTRIBUTOR:		**REDEX ORDER REF:**	209127
DESIGNATION:	KRP2+R.31.4.H	**SERIAL NUMBER:**	896781
CODE:	RX128908-12	**MOTOR FLANGE CODE:**	RX129627-02

For the installation, please refer to User Manual KRP (182/008)

SPECIFIC REMARKS:

Product images are for illustrative purposes only.

REDEX ANDANTEX
ZI-BP79
F45210 FERRIERES
www.redex.fr
Tel: +33 2 38 94 42 00
Fax: +33 2 38 94 42 99
Email: info@redex.fr

KRP

PERFORMANCE SHEET	RX183-006-A	Page 2/2

EXTERNAL DIMENSIONS & INTERFACES: **SN:** 896781

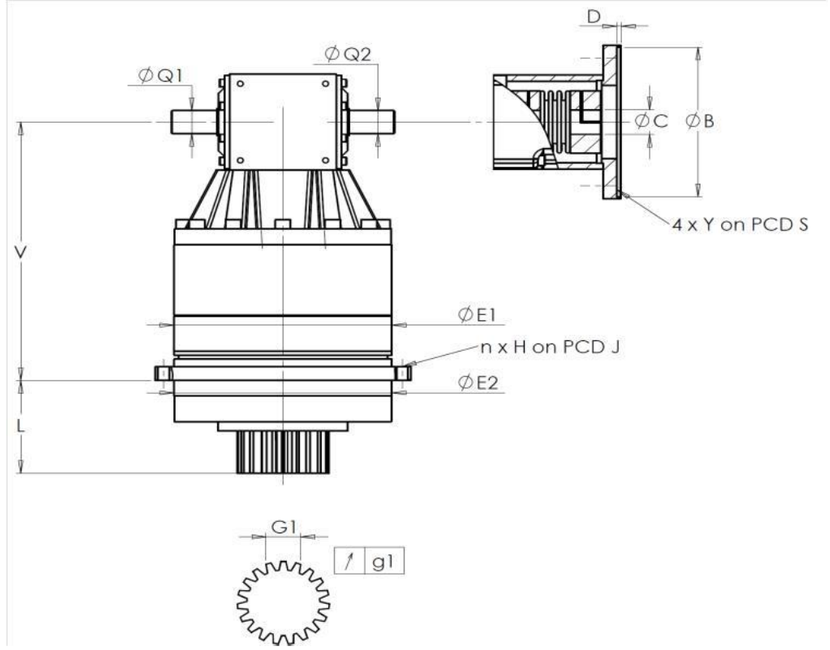

General tolerance: Js13	Cmm	Automatic / manual coordinate-measuring machine	µm	Micrometer	Cr	Calliper rule	Di	Dial indicator	Pg	Plug gauge

HOUSING

requirement					measure
					K2912
	E1	212h7 $^{0}_{-0,046}$	µm		211,98
	E2	200h7 $^{0}_{-0,046}$	µm		199,975
n x H on PCD J		12 Ø9 on PCD 233	Cr		12 Ø9 on PCD 233
			Cr		
	V	289	µm		289,52
	L	94	µm		93,78
Ø	Q1	25 $^{+0,009}_{-0,004}$	µm		25
Ø	Q2	25 $^{+0,009}_{-0,004}$	µm		25,005

OUTPUT PINION

requirement				measure
				Q0435
Span dimension over 4 teeth				
	G1	44,27 $^{0}_{-0,03}$	Cmm	44,25
↗	g1	0,022	Di	0,01
No-load input torque				
Line 1				1 Nm

	Line	Stiffness
Torsional stiffness (Nm/arcmin)	1	242
Radial stiffness (N/µm)	1	488

MOTOR FLANGE

requirement				measure
				K7599
Ø	B	114,3 $^{+0,047}_{+0,012}$	µm	114,323
Ø	C	35 $^{+0,05}_{+0,025}$	µm	35,025
	D	8	Cr	8,1
Ø	S1	200	Cr	200
Ø	Y1	M12	Pg	M12

Noise level

@2100 rpm input (dB(A))	75,5

Date: 26/02/2015 **Visa:** JJ PELLÉ

Version: A

REDEX ANDANTEX
ZI-BP79
F45210 FERRIERES
www.redex.fr
Tel: +33 2 38 94 42 00
Fax: +33 2 38 94 42 99
Email: info@redex.fr