KRPX

Performance sheet	RX183-007-D	Page 1/2

CUSTOMER:	BERTSCHE	**CUSTOMER ORDER REF:**	BERTSCHE 23891
DISTRIBUTOR:	ANDANTEX INCORPORATED	**REDEX ORDER REF:**	208935
DESIGNATION:	KRPX1+M.7.3.H.28/38	**SERIAL NUMBER:**	896399
CODE:	RX132765-02	**MOTOR FLANGE CODE:**	RX128581-02

For the installation, please refer to User Manual KRPX (182/010)

SPECIFIC REMARKS:

Product images are for illustrative purposes only.

REDEX ANDANTEX

ZI-BP79
F45210 FERRIERES
www.redex.fr

Tel: +33 2 38 94 42 00
Fax: +33 2 38 94 42 99
Email: info@redex.fr

KRPX

Performance sheet	RX183-007-D	Page 2/2

EXTERNAL DIMENSIONS & INTERFACES: **SN:** 896399

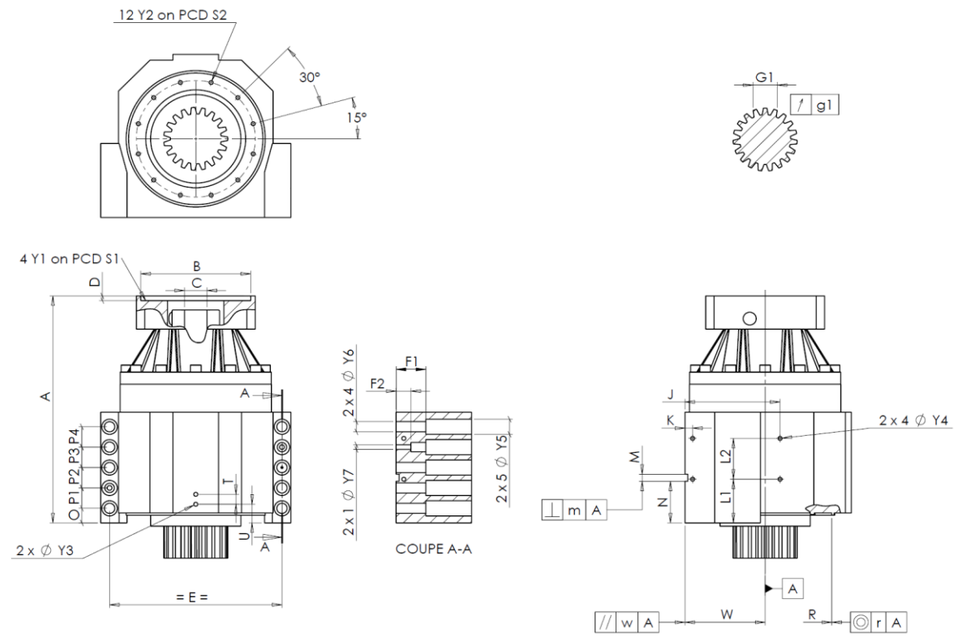

General tolerance: Js13 | *Cmm* Automatic / manual coordinate-measuring machine | *µm* Micrometer | *Cr* Calliper rule | *Di* Dial indicator | *Pg* Plug gauge

HOUSING requirement				HOUSING measure		HOUSING requirement				HOUSING measure		MOTOR FLANGE requirement				MOTOR FLANGE measure	
					K6351			L1	51	Cr	51						
		Y2	M6x12	Pg	OK			L2	48	Cr	48	Ø	B	115	µm	114.97
	Ø	S2	120 +0,1 -0,1	Cr	120			J	105	Cr	105	Ø	C	35 +0,05 +0,025	µm	35.025
		A	251	µm	251.92			K	11	Cr	11		D	8	Cr	8.53
		E	175	Cr	175		2 x 4Ø	Y4	M6x12	Pg	OK	Ø	S1	200	Cr	200
		O	15	Cr	15			F1	40	Cr	40.45	Ø	Y1	M12	Pg	OK
		P1	24	Cr	24			F2	24	Cr	23.7					
		P2	24	Cr	24		2 x 1Ø	Y7	10	µm	10					
		P3	24	Cr	24		2 x 4Ø	Y6	11	µm	11					
		P4	24	Cr	24		2 x 5Ø	Y5	18	µm	18					
		T	14	Cr	14			M H6	8H6 +0,009 0	Cmm	8,008					
		U	26	Cr	26		⊥	m	0,05	Cmm	0,0175					
	2 x 1Ø	Y3	M6x12	Pg	OK			N	47 +0,1 -0,1	Cmm	47,02					
		R	135 +0,2 +0,1	Cmm	135,17	A		W	80 +0,02 -0,02	Cmm	80					
	◎	r	0,1	Cmm	0,054		//	w	0,03 /A	Cmm	0,005						

No-load input torque

Line 1	0,7 Nm

	Line	Stiffness
Torsional stiffness (Nm/arcmin)	1	106
Radial stiffness (N/µm)	1	300

OUTPUT PINION				
			Q0415	
Span dimension over 3 teeth				
	G1	23,28 0 -0,03	Cmm	23,265
↗	g1	0,021	Di	0,01

Noise level

@1600 rpm input (dB(A))	63,0

Date: 27/11/2014 **Visa:** JJ PELLÉ

Version: A

REDEX ANDANTEX

ZI-BP79
F45210 FERRIERES
www.redex.fr

Tel: +33 2 38 94 42 00
Fax: +33 2 38 94 42 99
Email: info@redex.fr