KRP

PERFORMANCE SHEET	RX183-006-A	Page 1/2

CUSTOMER:	PRIMA	**CUSTOMER ORDER REF:**	SHANGHAI PRIMA GF140904FG0
DISTRIBUTOR:	GUEDEL CHINA	**REDEX ORDER REF:**	208968
DESIGNATION:	KRP2+M.91.3.S.14/24	**SERIAL NUMBER:**	896395
CODE:	RX132777-33	**MOTOR FLANGE CODE:**	RX128980-02

For the installation, please refer to User Manual KRP (182/008)

SPECIFIC REMARKS:

Product images are for illustrative purposes only.

REDEX ANDANTEX

ZI-BP79
F45210 FERRIERES
www.redex.fr

Tel: +33 2 38 94 42 00
Fax: +33 2 38 94 42 99
Email: info@redex.fr

KRP

PERFORMANCE SHEET	RX183-006-A	Page 2/2

EXTERNAL DIMENSIONS & INTERFACES: **SN:** 896395

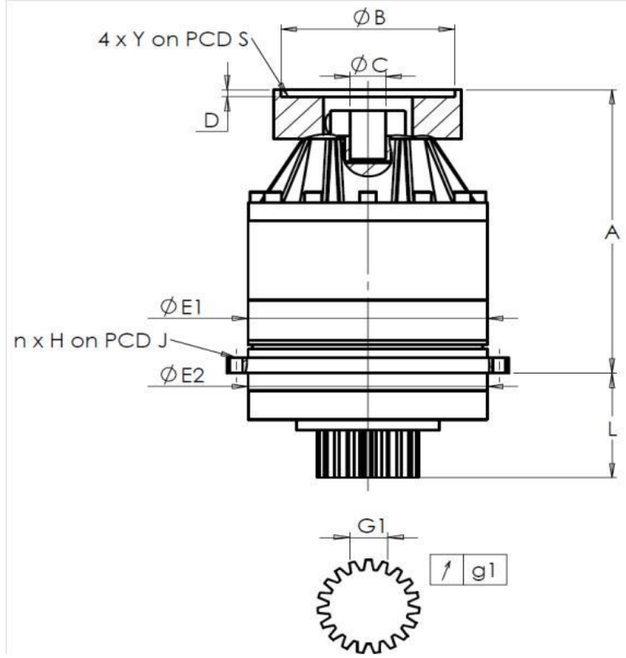

General tolerance: Js13	Cmm	Automatic / manual coordinate-measuring machine	µm	Micrometer	Cr	Calliper rule	Di	Dial indicator	Pg	Plug gauge

HOUSING

requirement				measure
				J7916
	E1	212h7 $^{0}_{-0,046}$	µm	212
	E2	200h7 $^{0}_{-0,046}$	µm	199.99
n x H on PCD J		12 Ø9 on PCD 233	Cr	
			Cr	OK
	A	268	µm	268.79
	L	94	µm	93.82

OUTPUT PINION

requirement				measure
				Q0180
Span dimension over 4 teeth				
	G1	44,27 $^{0}_{-0,03}$	Cmm	44.255
↗	g1	0,022	Di	0,01
No-load input torque				
Line 1				0,5 Nm

	Line	Stiffness
Torsional stiffness (Nm/arcmin)	1	242
Radial stiffness (N/µm)	1	394

MOTOR FLANGE

requirement				measure
Ø	B	131	µm	131
Ø	C	24 $^{+0,041}_{+0,02}$	µm	24.03
	D	5	Cr	5
Ø	S1	165	Cr	165
Ø	Y1	M10	Pg	OK

Noise level

@2100 rpm input (dB(A))	63,5

Date: 13/11/2014 **Visa:** JJ PELLÉ

Version: A

REDEX ANDANTEX

ZI-BP79
F45210 FERRIERES
www.redex.fr

Tel: +33 2 38 94 42 00
Fax: +33 2 38 94 42 99
Email: info@redex.fr