KRP

PERFORMANCE SHEET	RX183-006-A	Page 1/2

CUSTOMER:	ELECTROIMPACT	**CUSTOMER ORDER REF:**	ELECTROIMPACT 23815
DISTRIBUTOR:	ANDANTEX INCORPORATED	**REDEX ORDER REF:**	208913
DESIGNATION:	KRP2+M.46.3.H.28/38	**SERIAL NUMBER:**	896347
CODE:	RX128907-13	**MOTOR FLANGE CODE:**	RX128581-02

For the installation, please refer to User Manual KRP (182/008)

SPECIFIC REMARKS:

Product images are for illustrative purposes only.

REDEX ANDANTEX
ZI-BP79
F45210 FERRIERES
www.redex.fr
Tel: +33 2 38 94 42 00
Fax: +33 2 38 94 42 99
Email: info@redex.fr

KRP

PERFORMANCE SHEET	RX183-006-A	Page 2/2

EXTERNAL DIMENSIONS & INTERFACES: **SN:** 896347

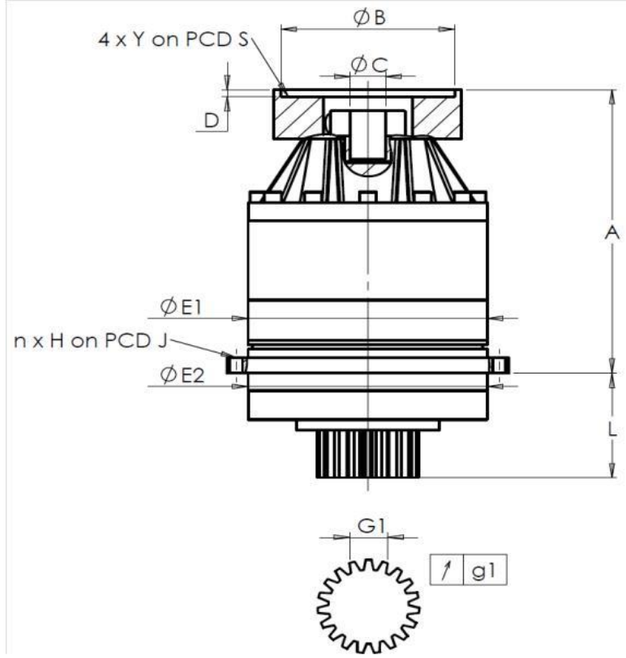

General tolerance: Js13	Cmm	Automatic / manual coordinate-measuring machine	µm	Micrometer	Cr	Calliper rule	Di	Dial indicator	Pg	Plug gauge

HOUSING

	requirement			measure
				J7945
	E1	212h7 $^{0}_{-0,046}$	µm	211.985
	E2	200h7 $^{0}_{-0,046}$	µm	199.98
	n x H on PCD J	12 Ø9 on PCD 233	Cr	
			Cr	OK
	A	288	µm	288.98
	L	94	µm	93.77

OUTPUT PINION

	requirement			measure
				Q1646
	Span dimension over 4 teeth			
	G1	44,27 $^{0}_{-0,03}$	Cmm	44,25
↗	g1	0,022	Di	0,015
	No-load input torque			
	Line 1			0,5 Nm

	Line	Stiffness
Torsional stiffness (Nm/arcmin)	1	246
Radial stiffness (N/µm)	1	390

MOTOR FLANGE

	requirement			measure
Ø	B	115	µm	113.94
Ø	C	35 $^{+0,05}_{+0,025}$	µm	35.04
	D	8	Cr	8.5
Ø	S1	200	Cr	200
Ø	Y1	M12	Pg	OK

Noise level

@2100 rpm input (dB(A))	69,5

Date: 05/11/2014 **Visa:** JJ PELLÉ

Version: A

REDEX ANDANTEX
ZI-BP79
F45210 FERRIERES
www.redex.fr
Tel: +33 2 38 94 42 00
Fax: +33 2 38 94 42 99
Email: info@redex.fr