KRP

PERFORMANCE SHEET	RX183-006-A	Page 1/2

CUSTOMER:	ELECTROIMPACT	**CUSTOMER ORDER REF:**	ELECTROIMPACT 23815
DISTRIBUTOR:	ANDANTEX INCORPORATED	**REDEX ORDER REF:**	208913
DESIGNATION:	KRP1+R.21.4.H	**SERIAL NUMBER:**	896346
CODE:	RX129591-11	**MOTOR FLANGE CODE:**	RX129592-07

For the installation, please refer to User Manual KRP (182/008)

SPECIFIC REMARKS:

Product images are for illustrative purposes only.

REDEX ANDANTEX
ZI-BP79
F45210 FERRIERES
www.redex.fr
Tel: +33 2 38 94 42 00
Fax: +33 2 38 94 42 99
Email: info@redex.fr

KRP

PERFORMANCE SHEET	RX183-006-A	Page 2/2

EXTERNAL DIMENSIONS & INTERFACES: **SN:** 896346

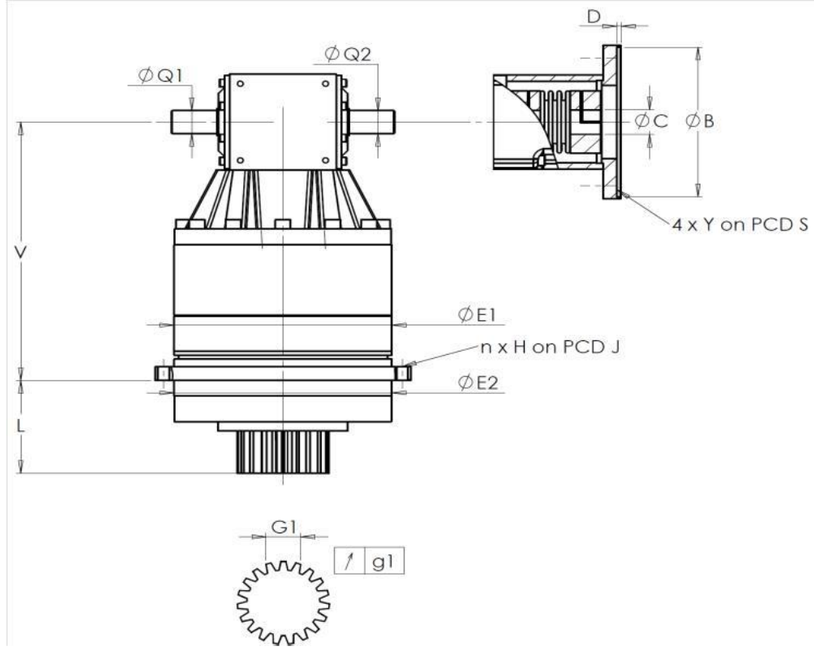

General tolerance: Js13	Cmm	Automatic / manual coordinate-measuring machine	µm	Micrometer	Cr	Calliper rule	Di	Dial indicator	Pg	Plug gauge

HOUSING

requirement					measure
					K6281
	E1	152h7 $^{0}_{-0,04}$	µm		151.98
	E2	140h7 $^{0}_{-0,04}$	µm		139.99
n x H on PCD J		12 Ø6,5 on PCD 168	Cr		
			Cr		OK
	V	228,5	µm		228.051
	L	71	µm		70.86
Ø	Q1	20 $^{+0,009}_{-0,004}$	µm		20
Ø	Q2	20 $^{+0,009}_{-0,004}$	µm		20

OUTPUT PINION

requirement				measure
				Q0418
Span dimension over 3 teeth				
	G1	23,28 $^{0}_{-0,03}$	Cmm	23,26
↗	g1	0,021	Di	0,02
No-load input torque				
Line 1				0,5 Nm

	Line	Stiffness
Torsional stiffness (Nm/arcmin)	1	90
Radial stiffness (N/µm)	1	402

MOTOR FLANGE

requirement				measure
				D6
Ø	B	110G7 $^{+0,047}_{+0,012}$	µm	110.030
Ø	C	24F7 $^{+0,041}_{+0,020}$	µm	24.020
	D	11	Cr	11
Ø	S1	145	Cr	145
Ø	Y1	M8	Pg	OK

Noise level

@2600 rpm input (dB(A))	71,5

Date: 13/11/2014 **Visa:** JJ PELLÉ

Version: A

REDEX ANDANTEX
ZI-BP79
F45210 FERRIERES
www.redex.fr
Tel: +33 2 38 94 42 00
Fax: +33 2 38 94 42 99
Email: info@redex.fr